Model No. MR052 JOB SITE RADIO

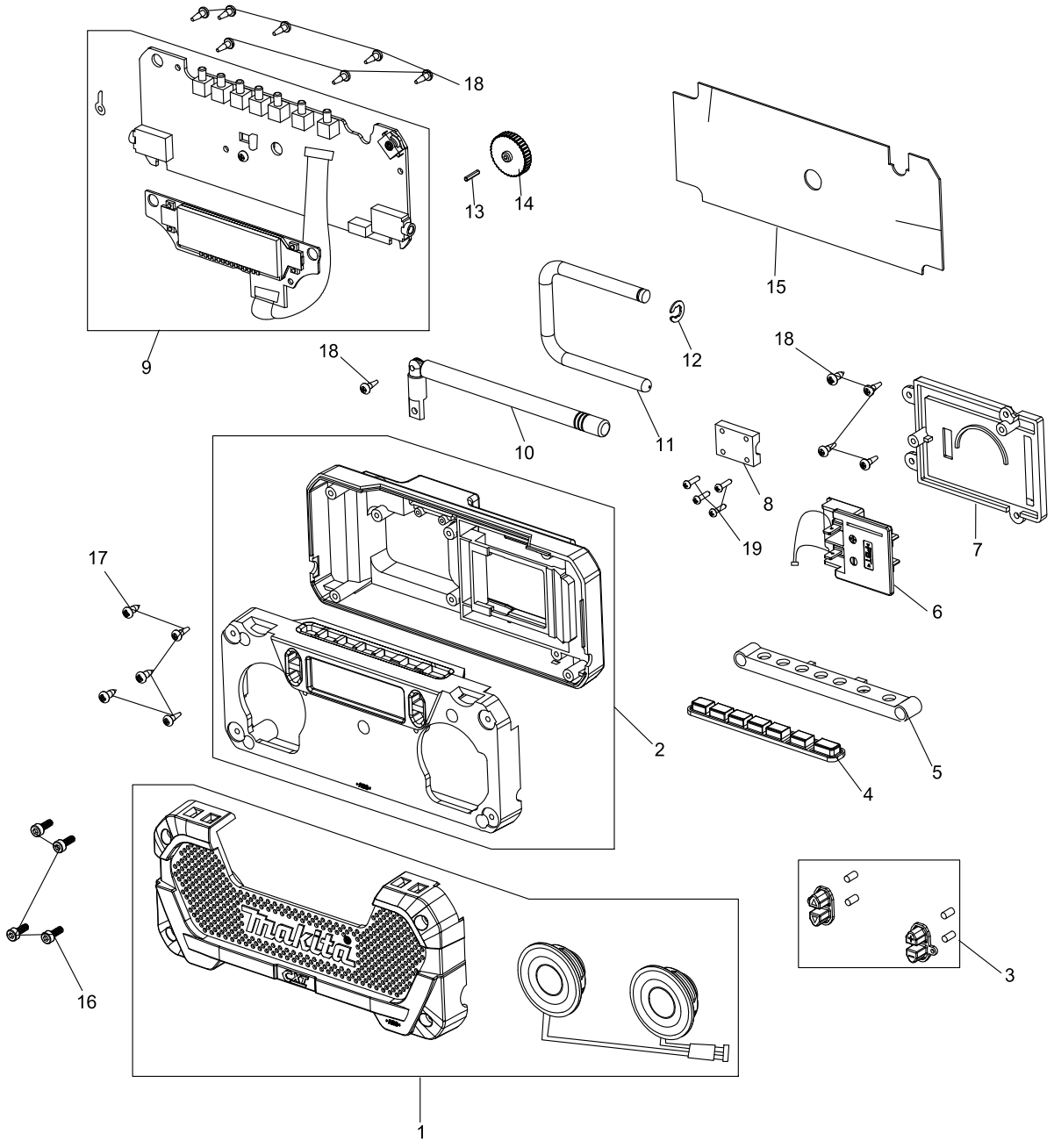

Model No. MR052 JOB SITE RADIO

Item	Parts No.	Description	I/C	Qty	N/O	Opt. 1	Opt. 2	Note
001	GM00001608	FRONT COVER ASSY ROS80520305		1				
002	GM00001609	FRONT+BACK HOUSING ASSY ROS80		1				
003	GM00001610	FUNCTION BUTTON ASSY ROS805203		1				
004	GM00001611	UPPER FUNCTION BUTTON C9840052		1				
005	GM00001612	SWITCH HOLDER C1040052004		1				
006	GM00001613	BATTERY TERMINAL ASSY ROS80520		1				
007	GM00001614	TERMINAL FIX PLATE C0140052003		1				
008	GM00001615	HOOK HOLDER ROS40520300		1				
009	GM00001628	MAIN LCD PCBA ASSY (EU)		1				
010	GM00001617	RUBBER FM ANTENNA B1502052941		1				
011	GM00001618	METAL HOOK ROS40520300		1				
012	GM00001619	E-RING B0301000500		1				
013	GM00001620	TUNING KNOB SHAFT B2401052941		1				
014	GM00001621	TUNING KNOB C0140052002		1				
015	GM00001622	SOUND SPONGE D1001052401		1				
016	GM00001623	SCREW 3x8 B0130080542		4				
017	GM00001024	SCREW 3X12 B0130120202		5				
018	GM00001395	SCREW 2.6X8PB B0126081102		12				
019	GM00001624	SCREW 2x8 B0120080102		4				

Please order the parts with a part number.

Print Date 24/08/2016